RoHS

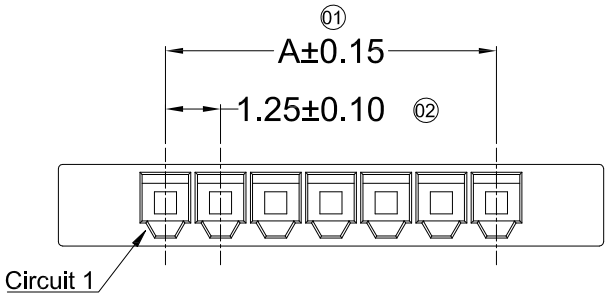

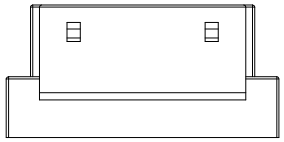

4P~30P Double Salient
Scale 1:5

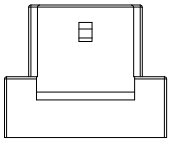

2P~3P Single Salient
Scale 1:5

■Specifications :
- Voltage rating: 200V AC / DC
- Current rating: 1A AC / DC
- Withstanding voltage: 500V AC/minute
- Temperature range: -40° ~+105°
- Insulation resistance:≥100MΩ
- Contact resistance: ≤40mΩ
- After environmental testing: ≤80mΩ
- Suitable GYA Terminal:A1255T
- Mates With GYA Wafer: A1255W

A1255 H X - 1*XX X - N0 XX XX
① ②③ ④ ⑤ ⑥ ⑦ ⑧

①Series No.
②Category: H-HSG
③Connector type: Blank-ordinary
④Row No.-Pin No per row: 1*XX-1*02P~1*30P
⑤Special No.:
⑥Plastic material: N0-PA66 94V-0
⑦Color: Blank-natural color
⑧Blank-ROHS ; HF-Halogen free

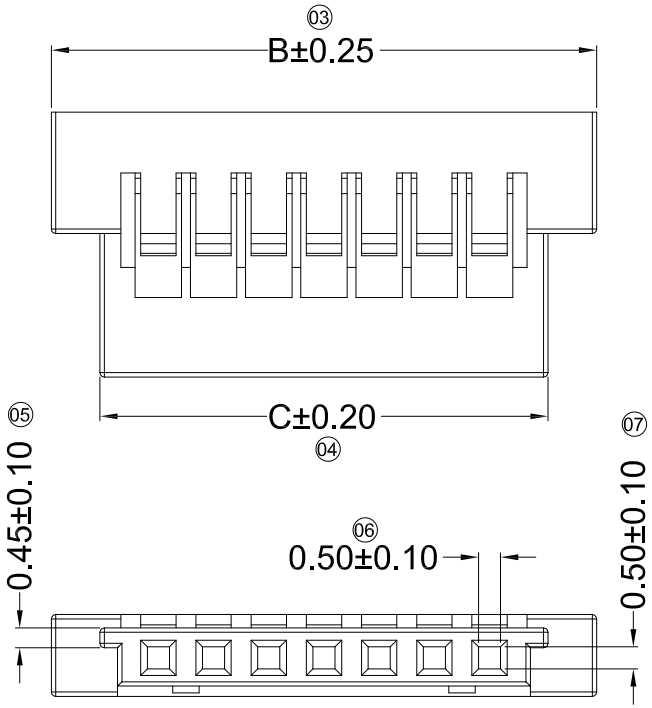

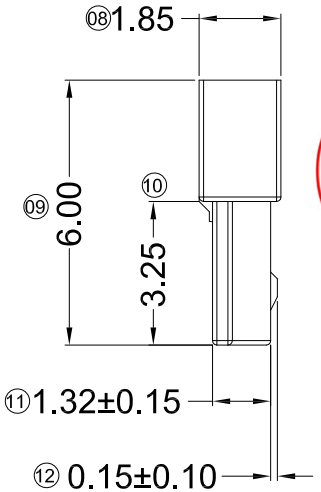

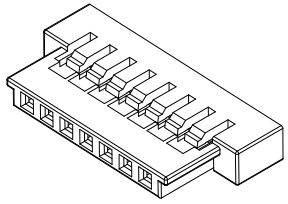

Poles	Dimensions(mm)			Poles	Dimensions(mm)		
	AB		C		AB		C
02	1.25	6.10	3.90	11	12.50	17.35	15.15
03	2.50	7.35	5.15	12	13.75	18.60	16.40
04	3.75	8.60	6.40	13	15.00	19.85	17.65
05	5.00	9.85	7.65	14	16.25	21.10	18.90
06	6.25	11.10	8.90	15	17.50	22.35	20.15
07	7.50	12.35	10.15	16	18.75	23.60	21.40
08	8.75	13.60	11.40	20	23.75	28.60	26.40
09	10.00	14.85	12.65	25	30.00	34.85	32.65
10	11.25	16.10	13.90	30	36.25	41.10	38.90

DATE	REV	ECN N0.	DESCRIPTION	MODIFY	APPROVAL

GENERAL TOLERANCE
.X ±0.30
.XX ±0.20
.XXX ±0.10
X.° ±2°
PROJECT

GYA Connectors 东莞市国亚电子有限公司
Dong Guan Guo Ya Connectors co., ltd.

APPROVAL	CHECK	DRAWN	DATE
Yangzhengguo	Yangzhengyi	Lvtiansheng	2016/08/26

PART NO.: A1255H-1xXX-N0XX
TITLE: 1.25mm Crimp Style Connectors

UNIT	SCALE	SHEET	REV	NUMBER
mm	1:1	1/1	A0	A-022

RoHS 成品工程图

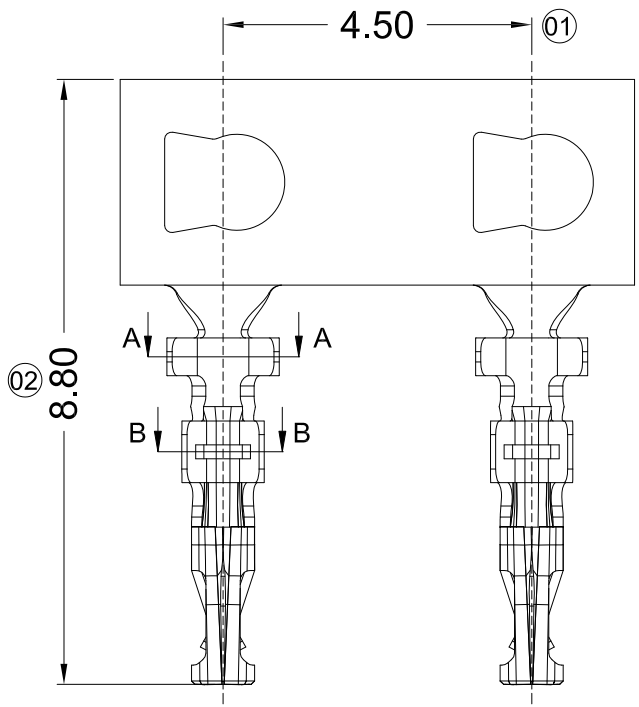

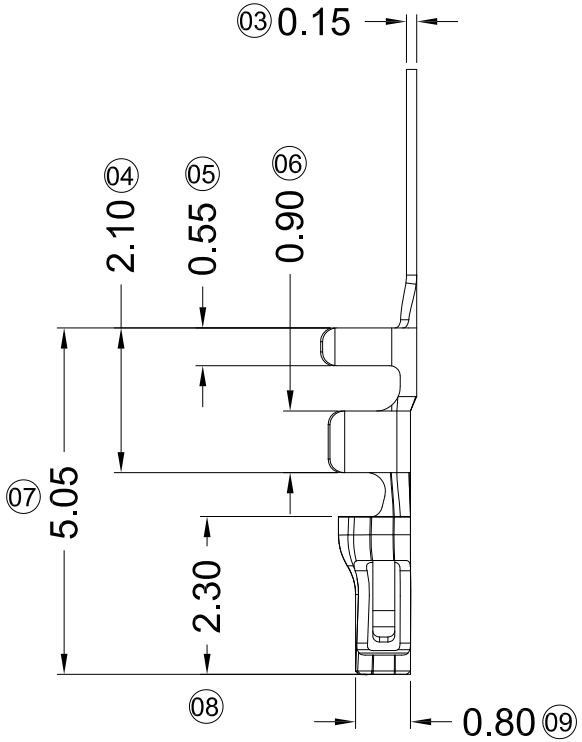

■Specifications :

- Voltage rating: 200V AC / DC
- Current rating: 1A AC / DC
- Withstanding voltage: 500V AC/minute
- Temperature range: -40° ~+105°
- Insulation resistance: ≥100MΩ
- Contact resistance: ≤40mΩ
- After environmental testing: ≤80mΩ
- Material(Pin): Phosphor bronze
- Mates With GYA Housing : A1255H

A1255 T X - P XX X - X
① ②③ ④ ⑤⑥ ⑦

① Series Number
② Category: T-terminal
③ Shape: Blank-ordinary
④ Material: P-Phosphor bronze
⑤ Plating Code:
V01- Gold Flash
SN-Bright tin plating
⑥ Plating method:
Blank-Stamping before plating
⑦ Mold No./Mark/Special No.

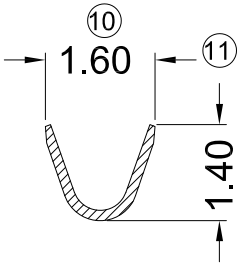

SECTION A-A
SCALE 1:1

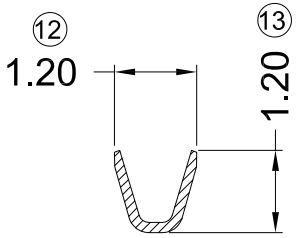

SECTION B-B
SCALE 1:1

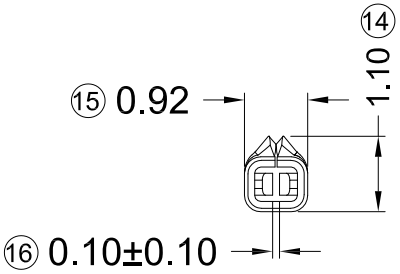

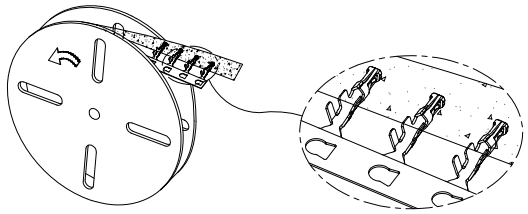

卷装方式

SCALE 4:1

DATE	REV	ECN N0.	DESCRIPTION	MODIFY	APPROVAL

GENERAL TOLERANCE
.X ±0.20
.XX ±0.15
.XXX ±0.08
X.° ±2°
PROJECT

GYA Connectors 东莞市国亚电子有限公司
Dong Guan Guo Ya Connectors co., ltd.

APPROVAL	CHECK	DRAWN	DATE
Yangzhengguo	Yangzhengyi	Lvtiansheng	2016/08/26

PART NO.: A1255T-PXX

TITLE: 1.25mm Crimp Style Connectors

UNIT	SCALE	SHEET	REV	NUMBER
mm	1:1	1/1	A0	A-014

RoHS

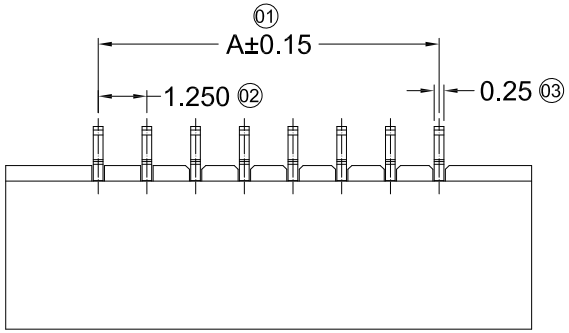

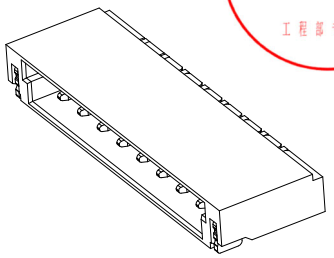

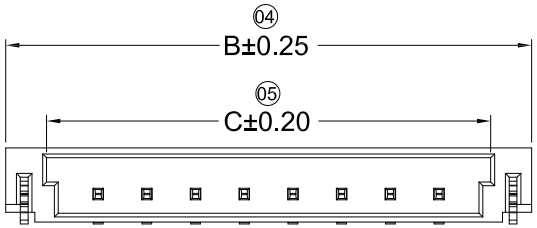

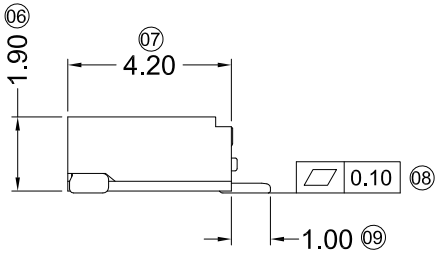

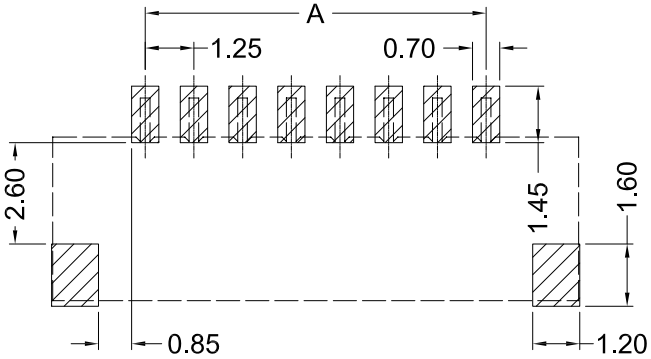

Recommended P.C.B Layout
General Tolerance±0.05

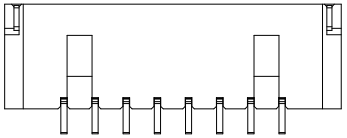

8P Double Hole
Scale 1:0.8

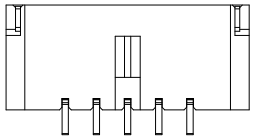

2P~6P Single Hole
Scale 1:0.8

■Specifications :

- Voltage rating: 200V AC / DC
- Current rating: 1A AC / DC
- Withstanding voltage: 500V AC/minute
- Temperature range: -40° ~+105°
- Insulation resistance: ≥100MΩ
- Contact resistance: ≤40mΩ
- After environmental testing: ≤80mΩ
- Material(Pin And Solder Tabs):Brass
- Mates With GYA Housing:A1255H-1*XX

A1255 W R S - 1*XX X - LP XX XX
① ② ③ ④ ⑤ ⑥ ⑦ ⑧ ⑨

①Series No.
②Category: W-wafer
③Connector type: R- Right Angle 90°
④Mouting type: S-SMT
⑤Row No.-Pin No per row: 1*XX-02P~06P, 08P;
⑥Special No.:
⑦Material: LP-LCP 94V-0
⑧Plating Code: V01-Gold Flash;
SW-Matte Tin plating
⑨Color: Blank-natural color

Poles	Dimensions(mm)		
	A	B	C
02	1.25	6.00	3.90
03	2.50	7.25	5.15
04	3.75	8.50	6.40
05	5.00	9.75	7.65
06	6.25	11.00	8.90
08	8.75	13.50	11.40

DATE	REV	ECN N0.	DESCRIPTION	MODIFY	APPROVAL

GENERAL TOLERANCE
.X ±0.30
.XX ±0.20
.XXX ±0.10
X.° ±2°
PROJECT

GYA Connectors 东莞市国亚电子有限公司
Dong Guan Guo Ya Connectors co., ltd.

APPROVAL	CHECK	DRAWN	DATE
Yangzhengguo	Yangzhengyi	Lvtiansheng	2016/08/26

PART NO. A1255WRS-1*XX-LPXX
TITLE 1.25mm Crimp Style Connectors

UNIT	SCALE	SHEET	REV	NUMBER
mm	1:1	1/1	A0	A-082

RoHS

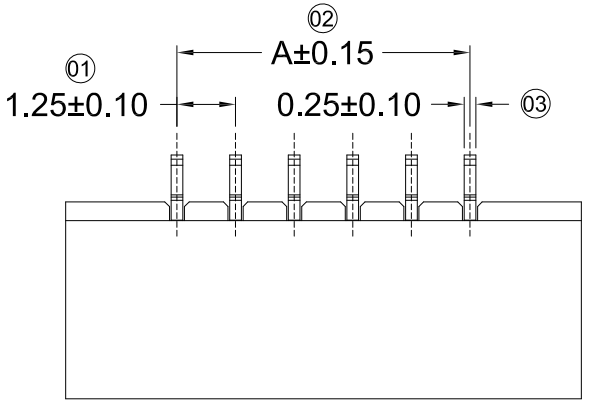

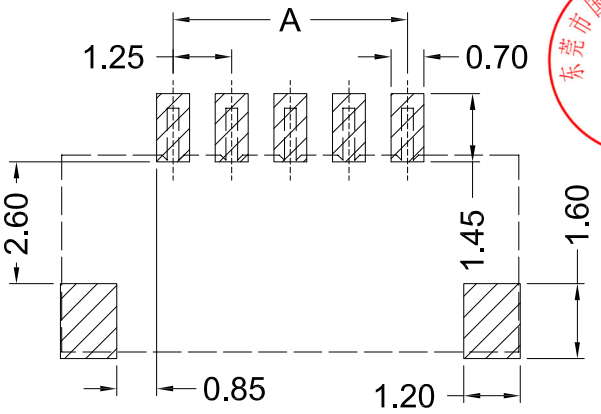

Recommended P.C.B Layout
General Tolerance±0.05

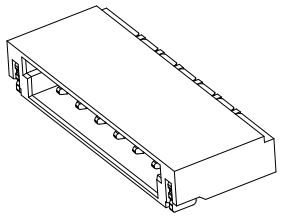

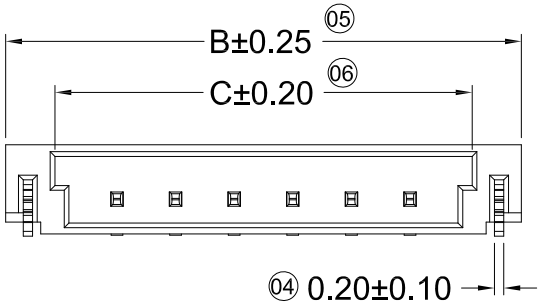

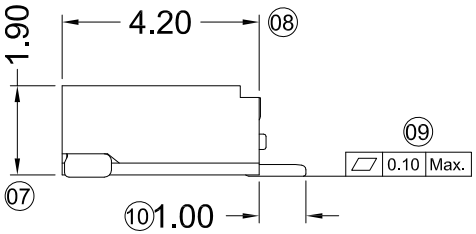

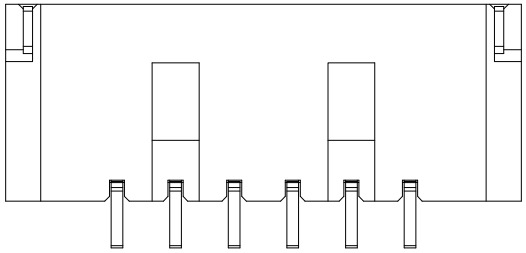

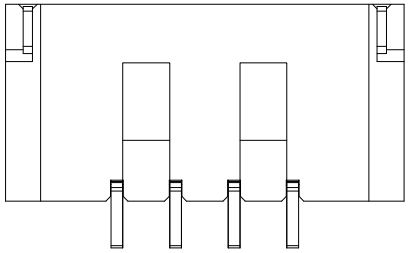

4P~6P Double

■Specifications :

- Voltage rating: 200V AC / DC
- Current rating: 1A AC / DC
- Withstanding voltage: 500V AC/minute
- Temperature range: -40° ~+105°
- Insulation resistance: ≥100MΩ
- Contact resistance: ≤40mΩ
- After environmental testing: ≤80mΩ
- Material(Pin And Solder Tabs):Brass
- Mates With GYA Housing : A1255H

A1255 W R S - 1*XX T - LP XX XX
① ② ③ ④ ⑤ ⑥ ⑦ ⑧ ⑨

① Series No.
② Category: W-wafer
③ Connector type: R- Right Angle 90°
④ Mouting type: S-SMT
⑤ Row No.-Pin No per row 1*XX-04P~06P
⑥ Special No.: T-Double Dole
⑦ Material: LP-LCP 94V-0
⑧ Plating Code: V01-Gold Flash;
SW-Matte Tin plating
⑨ Color: Blank-natural color

Poles	Dimensions(mm)		
	A	B	C
04	3.75	8.50	6.40
05	5.00	9.75	7.65
06	6.25	11.00	8.90

DATE	REV	ECN N0.	DESCRIPTION	MODIFY	APPROVAL

GENERAL TOLERANCE
.X ±0.30
.XX ±0.20
.XXX ±0.10
X.° ±2°
PROJECT

GYA Connectors 东莞市国亚电子有限公司
Dong Guan Guo Ya Connectors co.,ltd.

APPROVAL	CHECK	DRAWN	DATE
Yangzhengguo	Yangzhengyi	Lvtiansheng	2016/08/26

PART NO.: A1255WRS-1*XXT-LPXX
TITLE: 1.25mm Crimp Style Connectors

UNIT	SCALE	SHEET	REV	NUMBER
mm	1:1	1/1	A0	A-082