RoHS 包装图

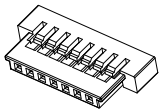

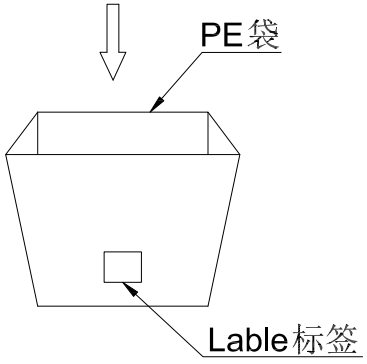

Note注解：

1. Put Housing in a PE bag, PE bag gauge for: 130 * 135 * 0.10 mm, Packing detail see the table below
   将 Housing放入PE袋内，PE袋规为:130*135*0.10mm,详细包装见下表
2. Put PE bag packed products in specifications of 330 * 250 * 300 mm cartons, Packing detail see the table below
   将装好产品的PE袋放入规格为330*250*200mm的纸箱内，详细包装见下表
3. Label depends on customer request, carton opening joint with transparent tape
   标签依客户要求而定，纸箱开口处用透明胶带贴合.

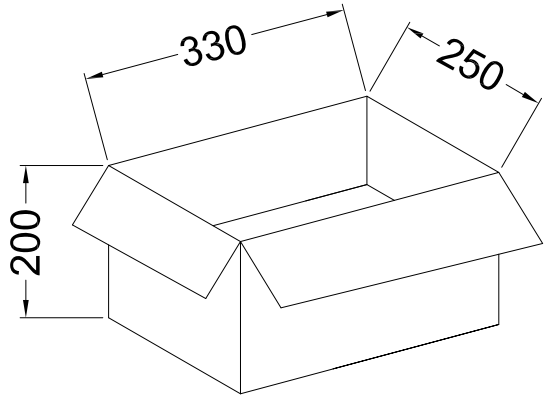

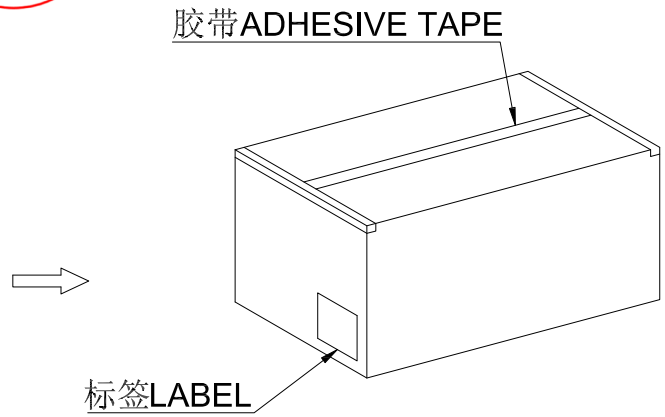

Poles	Bag PCS	CARTON Bag	CARTON PCS
1*02	1000	75	75K
1*03	1000	75	75K
1*04	1000	75	75K
1*05	1000	75	75K
1*06	1000	75	75K
1*07	1000	75	75K
1*08	1000	75	75K
1*09	1000	75	75K
1*10	1000	75	75K
1*11	1000	75	75K
1*12	1000	75	75K
1*13	1000	75	75K
1*14	1000	75	75K
1*15	1000	75	75K
1*16	1000	75	75K
1*20	1000	75	75K
1*25	1000	75	75K
1*30	1000	75	75K

DATE	REV	ECN NO.	DESCRIPTION	MODIFY	APPROVAL

GENERAL TOLERANCE
.X ±0.30
.XX ±0.20
.XXX ±0.10
X.° ±0.2°
视角

GYA Connectors 东莞市国亚电子有限公司 Dong Guan Guo Ya Connectors co.,ltd.

APPROVAL	CHECK	DRAWN	DATE
Yangzhengguo	Yangzhengyi	Lvtiansheng	2016/08/26

PART NO.: A1255H-1*XX-XX

TITLE: 1.25mm Housing Package

UNIT	SCALE	SHEET	REV	NUMBER
mm	1:1	1/1	A0	A-106

RoHS 包装图

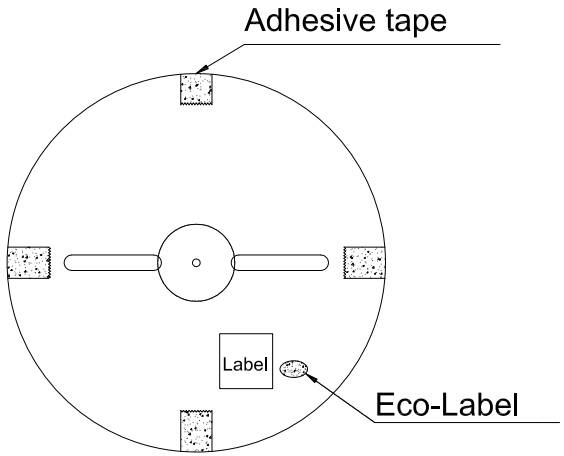

Note注解:

1.Quantity数量:

15K PCS/REEL 一卷15K/PCS

14 REEL/BOX 一箱14卷

210K PCS/BOX 一箱210K/PCS

2.Each reel and outer box must be labeled and Eco-Label Respectively labeled

每盘和外箱都必须有标签及环保标签分别标示

3.Terminal winding direction as shown

端子缠绕方向如左图所示

4.There shall be no dirt such as deformation phenomenon, Mantissa box fillers must be used

每箱不可有脏污, 变形现象, 尾数箱必须用填充物

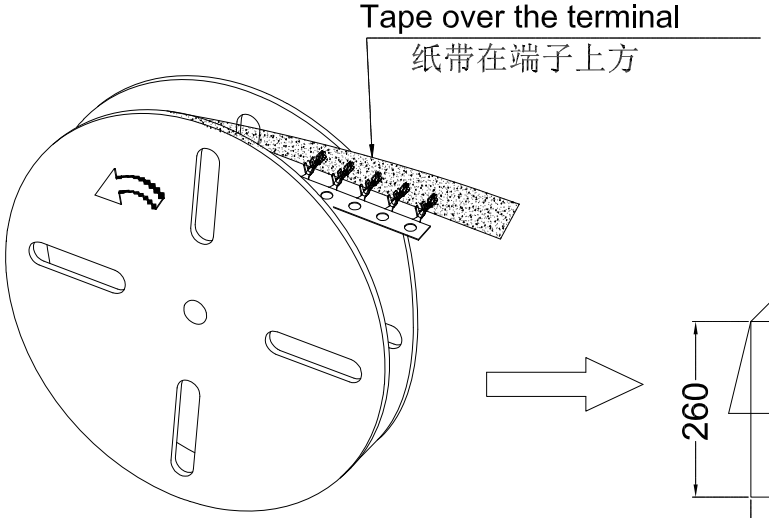

卷装方式

Package way

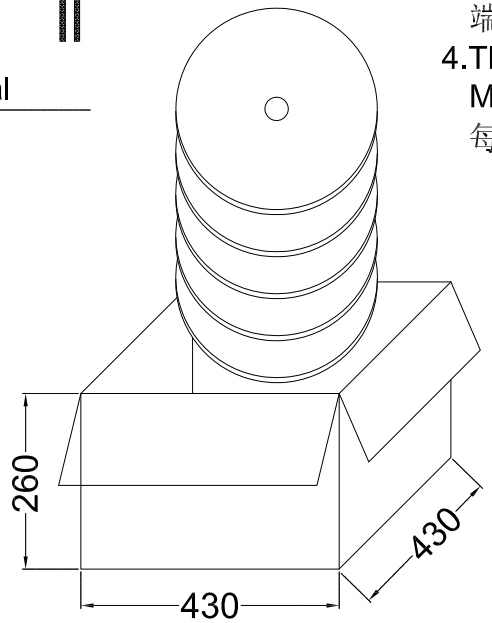

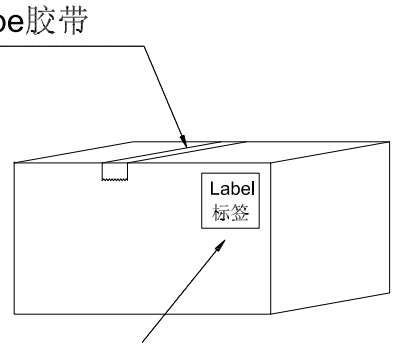

Label unified on the box top right corner

外箱标签位于右上角

DATE	REV	ECN NO.	DESCRIPTION	MODIFY	APPROVAL

GENERAL TOLERANCE

.X ±0.30

.XX ±0.20

.XXX ±0.10

X.° ±0.2

视 角

GYA Connectors 东莞市国亚电子有限公司 Dong Guan Guo Ya Connectors co., ltd.

APPROVAL	CHECK	DRAWN	DATE
Yangzhengguo	Yangzhengyi	Lvtiansheng	2016/08/26

PART NO.: A1255T-XXX

TITLE: 1.25mm Terminal Packing

UNIT	SCALE	SHEET	REV	NUMBER
mm	1:1	1/1	A0	A-014

RoHS 包装图

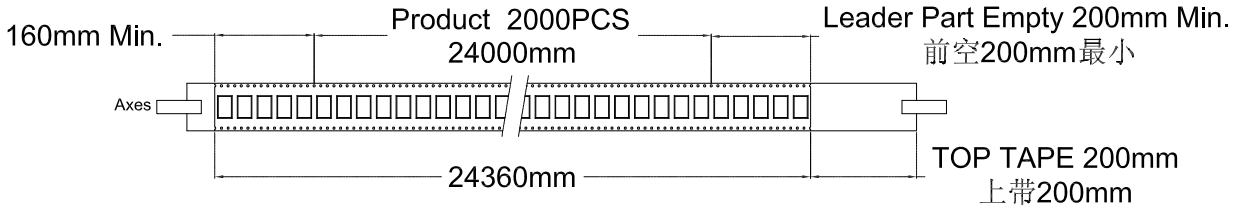

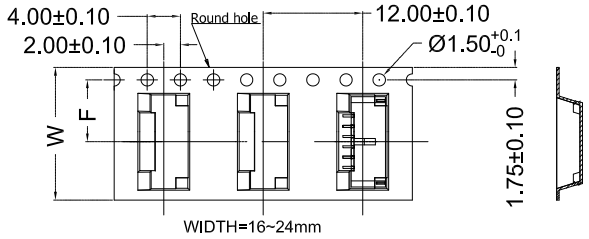

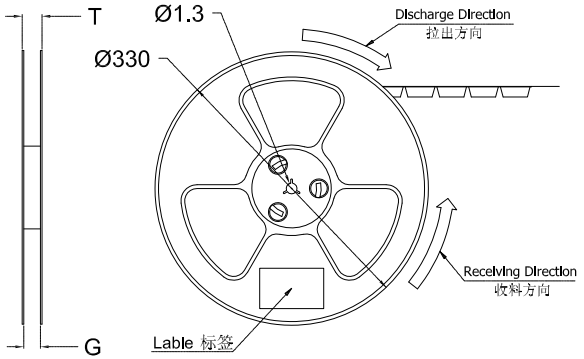

Single hole: None Hole Side
单孔：贴无链孔侧
Double hole: Elliptical Hole Side
双孔：贴椭圆孔侧

COVER TAPE PEEL STRENGTH:20~120g
剥离力量20~120g
速度 PEEL SPEED:300mm/minute

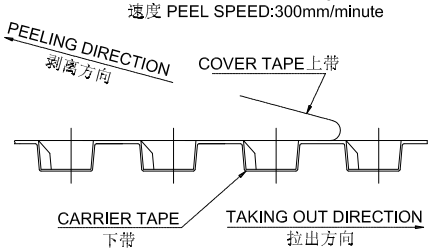

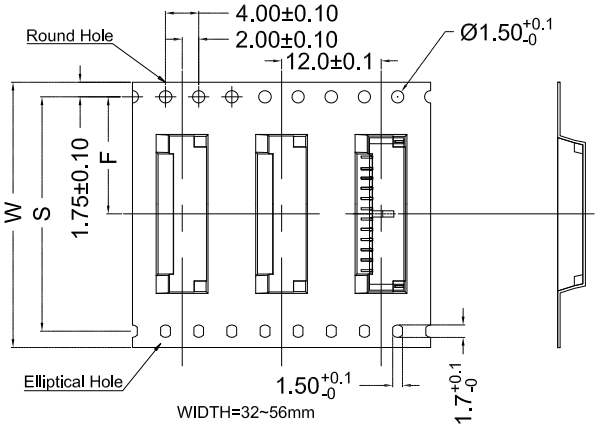

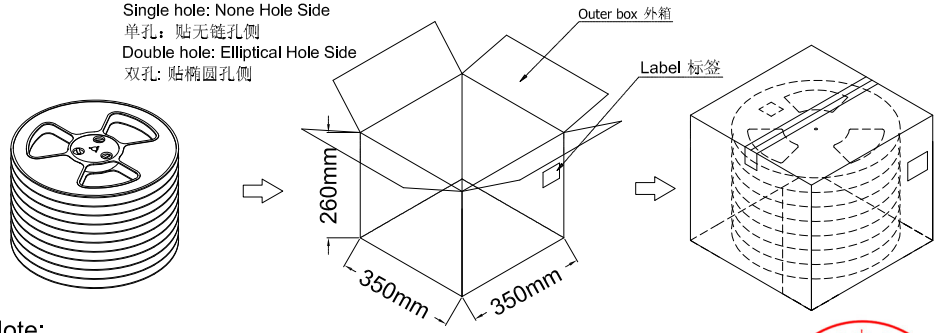

	Pin No.	W	S	F	T	G	REEL PCS	CARTON R	CARTON PCS
A1255WRS-1*XX	A1255WRS-1*02 02Pin~04Pin	16	/	7.50	20.50	16.40	2000	11R	22000
	A1255WRS-1*05 05Pin~11Pin	24	/	11.50	28.50	24.40	2000	8R	16000
	A1255WRS-1*12	32	28.40	14.20	36.50	32.40	2000	6R	12000
	A1255WRS-1*13								
	A1255WRS-1*14								
	A1255WRS-1*15	44	40.40	20.20	48.50	44.40	2000	5R	10000
	A1255WRS-1*20								
	A1255WRS-1*25	56	52.40	26.20	60.5	56.40	2000	4R	8000
	A1255WRS-1*30								

Note:

1. Carrier Camber Is Within 1mm In 100mm； 带长100mm内容许弯曲度1mm
2. 10 Sprocket Hole Pitch Cumulative Tolerance±0.2MM； 圆孔十个孔距离累计允许公差为 ±0.2mm
3. Carrier tape materaial for PS；下带材质为PS材质； Color颜色:Natural透明色
4. bracer保护带：Color颜色:Natural透明色，厚度0.40mm最小
5.Thinkess=0.30±0.05；材料厚度为0.30±0.05mm
6.Carton material纸箱材质:K=K； Carton Thickness 纸箱厚度：6~7mm

DATE	REV	ECN NO.	DESCRIPTION	MODIFY	APPROVAL

GENERAL TOLERANCE
.X ±0.30
.XX ±0.20
.XXX ±0.10
X.° ±0.2
视 角

GYA Connectors 东莞市国亚电子有限公司 Dong Guan Guo Ya Connectors co.,ltd.

APPROVAL	CHECK	DRAWN	DATE
Yangzhengguo	Yangzhengyi	Lvtiansheng	2016/08/26

PART NO.: PPN:A1255WRS-1*XX

TITLE: 1.25mm SMT 90° Packing

UNIT	SCALE	SHEET	REV	NUMBER
mm	1:1	1/1	A0	A-106