RoHS 包装图

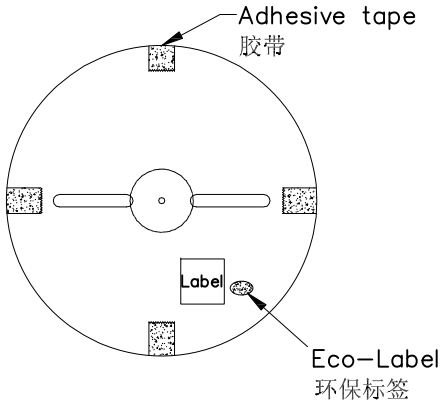

Note 注解:

1.Quantity 数量:

20K PCS/REEL 一卷20K/PCS

10 REEL/BOX 一箱10卷

200K PCS/BOX 一箱200K/PCS

2.Each reel and outer box must be labeled and Eco-Label Respectively labeled

每盘和外箱都必须有标签及环保标签分别标示

3.Terminal winding direction as shown

端子缠绕方向如左图所示

4.There shall be no dirt such as deformation phenomen Mantissa box fillers must be used

每箱不可有脏污, 变形现象, 尾数箱必须用填充物

5.Carton material:K=K, Carton thickness:6±1mm

纸箱材质: K=K,纸箱厚度: 6~7mm

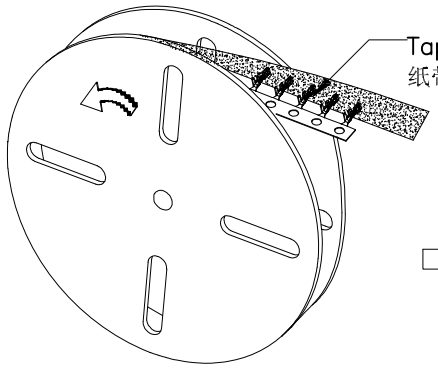

卷装方式
Package way

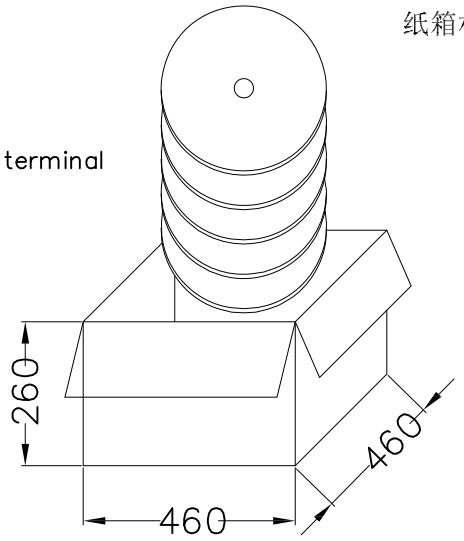

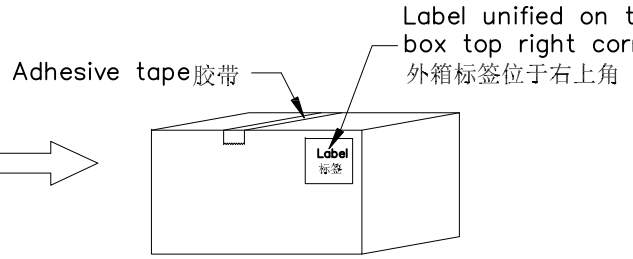

DATE	REV	ECN NO	DESCRIPTION	MODIFY	APPROVAL

GENERAL TOLERANCE	
.X	±0.30
.XX	±0.20
.XXX	±0.10
X°	±0.2°

视角

GYA Connectors 东莞市国亚电子有限公司 Dong Guan Guo Ya Connectors co.,ltd.

APPROVAL	CHECK	DRAWN	DATE
Yangzhengguo	Yangzhengyi	Lvtiansheng	2016/08/26

PARTNO. A1006T-PXX-D

TITLE 1.00mm Terminal Packing

UNIT	SCALE	SHEET	REV	NUMBER
mm	1:1	1/1	A0	A-014

RoHS 包装图

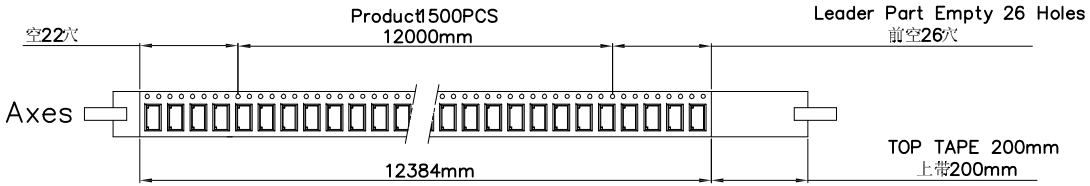

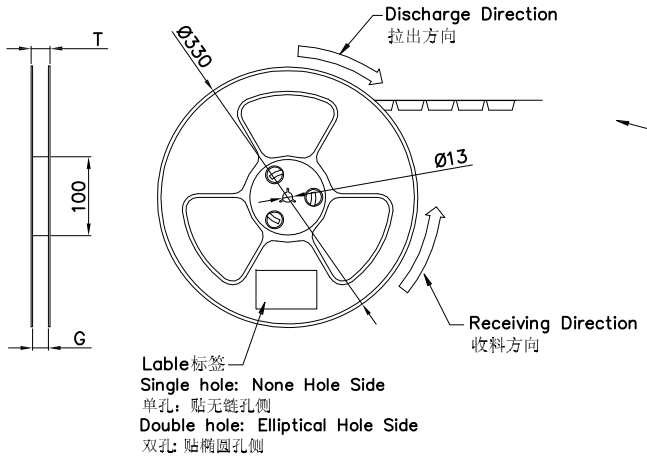

COVER TAPE PEEL STRENGTH: 20~120g
上带剥离力量: 20~120g
速度 PEEL SPEED: 300mm/minute

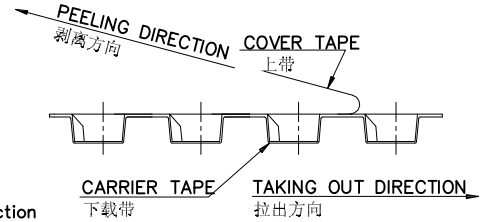

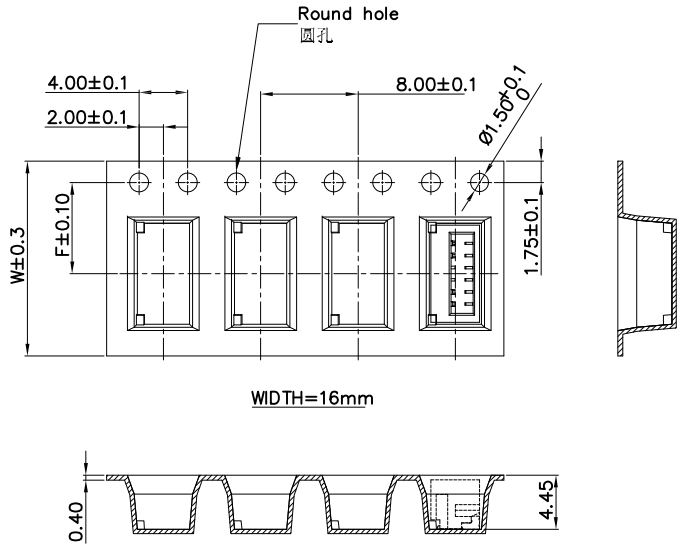

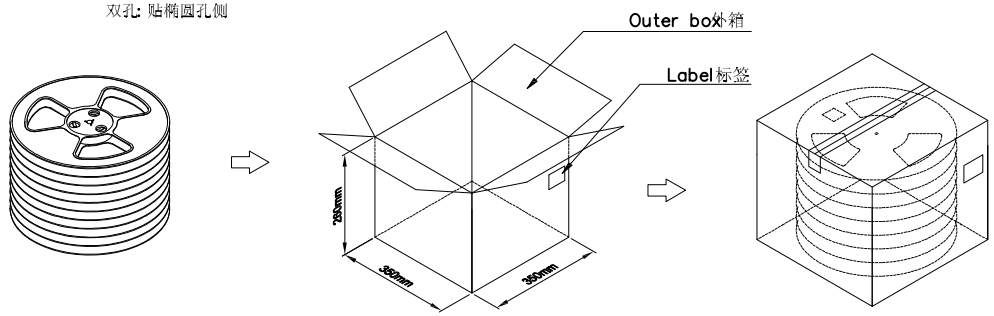

Note:
1. Carrier Camber Is Within 1mm In 100mm ；带长100mm 内容许弯曲度1mm
2. 10 Sprocket Hole Pitch Cumulative Tolerance±0.2MM ；圆孔十个孔距离累计允许公差为±0.2mm
3. Carrier tape materaial for PS ；下带材质为PS材质; Color 颜色：Natural 透明色
4. bracer 保护带：Color 颜色：Natural 透明色, 厚度0.40mm 最小
5.Thinkess=0.40±0.05 ；材料厚度为 0.40±0.05mm
6.Carton material 纸箱材质：K=K; Carton Thickness 纸箱厚度：6~7mm

	Part No.	W	S	F	T (MAX)	G(MAX)	REEL /PCS	CARTON /R	CARTON /PCS
A1006WVS-06D-6TSW A1006WVS-06DM-6TSW	A1006WVS-06DHF	16	/	7.50	20.50	16.40	1500	12R	18K

DATE	REV	ECN NO	DESCRIPTION	MODIFY	APPROVAL

GENERAL TOLERANCE

.X	±0.30
.XX	±0.20
.XXX	±0.10
X.°	±0.2°

视 角

GYA Connectors 东莞市国亚电子有限公司 Dong Guan Guo Ya Connectors co., ltd.

APPROVAL	CHECK	DRAWN	DATE
Yangzhengguo	Yangzhengyi	Lvtiansheng	2016/08/26

PARTNO.
PPN: A1006WVS-06DX-6TSW

TITLE
1.00mm Connectors SMT 180° Packing

UNIT	SCALE	SHEET	REV	NUMBER
mm	1:1	1/1	A0	A-203

RoHS 包装图

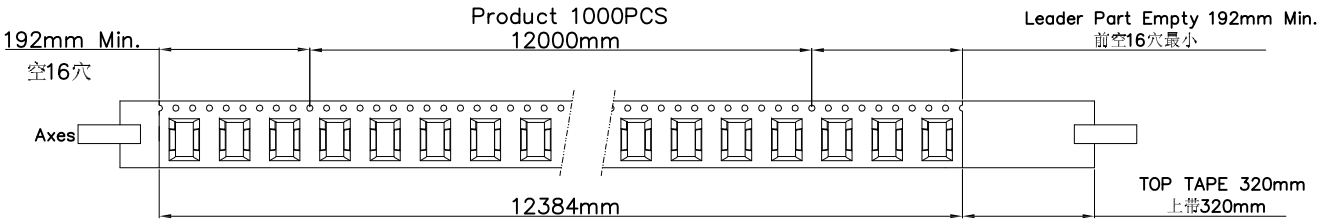

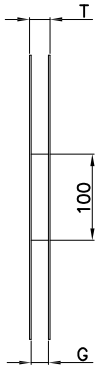

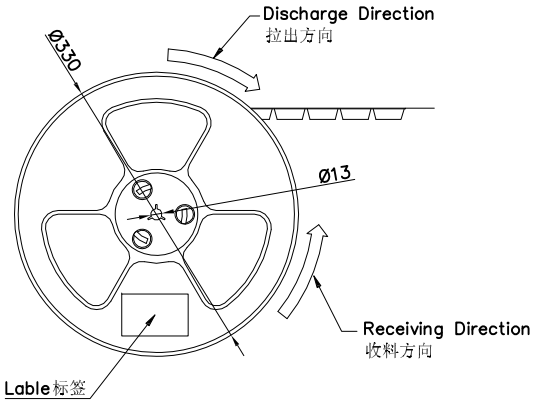

Single hole: None Hole Side
单孔：贴无链孔侧
Double hole: Elliptical Hole Side
双孔：贴椭圆孔侧

COVER TAPE PEEL STRENGTH: 20~120g
上带剥离力量: 20~120g
速度 PEEL SPEED: 300mm/minute

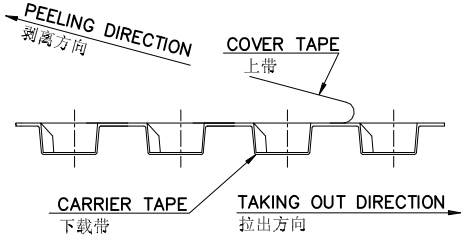

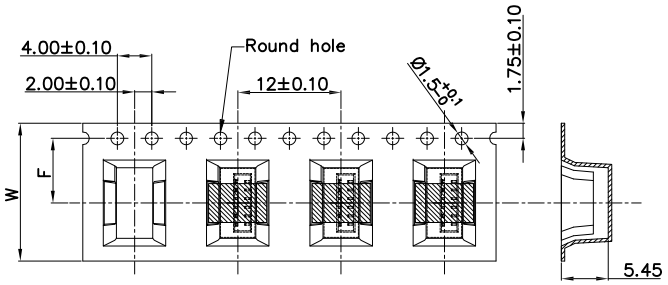

WIDTH=16~24mm

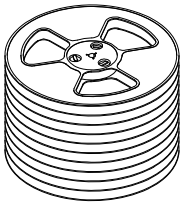

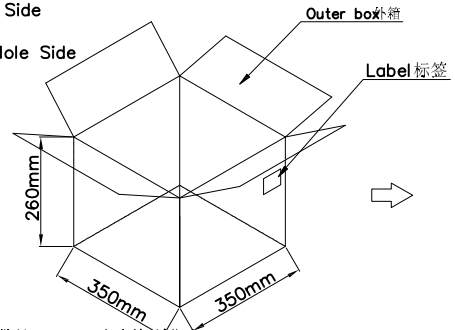

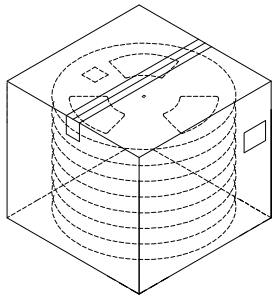

Note:
1. Carrier Camber Is Within 1mm In 100mm ; 带长100mm内容许弯曲度1mm
2. 10 Sprocket Hole Pitch Cumulative Tolerance±0.2MM ；圆孔十个孔距离累计允许公差为±0.2mm
3. Materaial for PS ; 材质为PS材质 ; Color 颜色: Black 黑色
4. Bracer 保护带：Color 颜色:Natural 透明色;厚度0.40mm 最小
5.Thinkess=0.40±0.05 ；材料厚度为0.40±0.05mm
6.Carton material 纸箱材质:K=K; Carton Thickness 纸箱厚度：6~7mm

A1006WVS-06DC-6TSW	Part No.	W	S	F	T (MAX)	G(MAX)	REEL /PCS	CARTON /R	CARTON /PCS
	A1006WVS-06DC	16	/	7.50	20.50	16.40	1000	11R	11K

DATE	REV	ECN NO	DESCRIPTION	MODIFY	APPROVAL

GENERAL TOLERANCE

.X	±0.30
.XX	±0.20
.XXX	±0.10
X°	±0.2°

视 角

GYA Connectors 东莞市国亚电子有限公司 Dong Guan Guo Ya Connectors co.,ltd.

APPROVAL	CHECK	DRAWN	DATE
Yangzhengguo	Yangzhengyi	Lvtiansheng	2016/08/26

PARTNO.
PPN: A1006WVS-06DC-6TSW

TITLE
1.00mm Connectors SMT 180° Packing

UNIT	SCALE	SHEET	REV	NUMBER
mm	1:1	1/1	A0	A-106

东莞市国亚电子有限公司 工程部专用章